Work Order ID 160072

160072

Thursday, April 20, 2017 1:54:45 PM

Item ID: 646.3316 **Accept** *N900040100* **Setup Start** *NS1*

Revision ID: **Stop** *NS2*

Item Name: Blade

Start Date: 4/25/2017 **Start Qty:** 12.00 *12* **Cust Item ID:**

Required Date: 5/10/2017 **Req'd Qty:** 12.00 *12* **Customer:**

Reference: (P.A.)SCHEDULED/S

Approvals: **Process Plan:** DAS 21 9-89 **Date:** APR 2 0 2017 **Tooling:** **Date:** **Run Start** *NR1*

QC: **Date:** **SPC (Y/N):** **Date:** **Stop** *NR2*

Sequence ID/ Work Center ID	Operation Description	Set Up/ Run Hours	Tool ID	Tool #	Plan Code	Accept Qty	Reject Qty	Reject Number	Insp. Stamp
Draw Nbr / **Revision Nbr**: 646.3300 / N/C3									
100		0.00							DAS 20 9-89 17-04-22
100	BAND SAW					12	ø		
Bandsaw	**Memo**	0.11							
Jeaspa Bandsaw	Cut Blank at 6.000"								
110		1.50							DAS 20 9-89 17-04-23
110	HAAS CNC VERTICAL MACHINING #1					12	ø		
HAAS 1	**Memo**	5.37							
HAAS CNC vertical machine #1	1-Machine per folio FB147 DWG REV: N1C FOLIO REV: AA								

2- deburr and break all sharp edges except otherwise noted

KNIFE EDGE MUST BE SHARPENED USING STONE,REMOVE ALL BURRS ON CUTTING EDGE

DQA: _____ Date: _____

WORK ORDER NON-CONFORMANCE / UPDATE

QA Closed: Date: Work Order update only ☐

Work Order: _____

Part No. _____

NCR No.

DISPOSITION

Rework	☐
Scrap	☐
Use-as-is	☐
Suspected Unapproved	☐

AGAINST DEPARTMENT/PROCESS

Skid-tube	☐	Cross tube	☐	Water Jet	☐
Machining	☐	Small Fab	☐	Prod. Eng. Coor.	☐
Thermoforming	☐	Finishing	☐	Rec/Store/Packaging	☐
Large Fab	☐	Composite	☐	Supplier	☐

Engineering	☐		
Quality	☐		
Other	☐		
	☐		

Date :	Step #:	QTY Effective :	**MRB (QSI042) Approval**
Description Work Order Deviation		**Disposition**	**Completed By**
			Lead hand / Supervisor Approval Verification
			QC / QA Coordinator Approval

Root Cause

Environment	☐	☐	No Re-verfication
Design	☐	☐	Operator
Doc/Data	☐	☐	Offset/Setup
Equip/Tooling	☐	☐	Supplier
Handling/Pre	☐	☐	Training
Material	☐	☐	Use for Testing
Internal Transport	☐	☐	Poor Information
Tribal Knowledge	☐	☐	Rushing
LOA	☐	☐	Product Improvement
Substation	☐	☐	Process Improvement
Past Expiry Date	☐	☐	Manufacturing Process
Misidentified	☐	☐	Past Due

FAULT CATEGORY

☐ Pressure/Forced	☐ Temperature/Cure	☐ Power Loss/Surge	☐ Positioned Wrong
☐ Bending	☐ Set-up	☐ Folio/Program	☐ Outside Dimensions
☐ Centre Not Concentric	☐ BOM/Route	☐ Grain	☐ Over/Under tolerance
☐ Cracks	☐ Broken/Damage/Defect	☐ Weld	☐ Part Incorrect
☐ Crimp/Kink/Ripple/Wave	☐ Inspection Incomplete/Unqualified	☐ Wrong Stock Pulled	☐ Part Lost/Missing
☐ Cuffs	☐ Contamination	☐ Out of Sequence	☐ Part Moved
☐ Crushing	☐ Countersink	☐ Off-set	☐ Drawing
☐ Heat Treat	☐ Cut Too Short	☐ Mislabeled	☐ Finish
☐ Wave/Twist in Tube	☐ Instructions Incomplete/Unclear	☐ Fit/Function	☐ Misread
☐ Marks/Chatter	☐ Drill Holes	☐ Misaligned/off center	☐ Turning Sequence

☐ OTHER :

Item ID: 646.3316 **Accept** *N900040100* **Setup Start** *NS1*
Revision ID: **Stop** *NS2*
Item Name: Blade
Start Date: 4/25/2017 **Start Qty:** 12.00 *12* **Cust Item ID:**
Required Date: 5/10/2017 **Req'd Qty:** 12.00 *12* **Customer:**
Reference: (P.A.)SCHEDULED/S

Approvals: **Process Plan:** _____ **Date:** _____ **Tooling:** _____ **Date:** _____ **Run Start** *NR1*
QC: _____ **Date:** _____ **SPC (Y/N):** _____ **Date:** _____ **Stop** *NR2*

Sequence ID/ Work Center ID	Operation Description	Set Up/ Run Hours	Tool ID	Tool #	Plan Code	Accept Qty	Reject Qty	Reject Number	Insp. Stamp
120	QC2- Inspect parts off machine FAI/FAIB	0.00							DAS 20 9-89 17-04-23
120						12	ø		
QC	**Memo**	0.12							
Quality Control									
130	QC8- Inspect parts - second check	0.00							DAS 49 9-89 17/04/25
130						12			
QC	**Memo**	0.24							
Quality Control									
140	Outsource process - Heat Treat	0.00							DAS 13 9-89
140						12	MAY 0 2 2017		
Outsource1	**Memo**	2,880.00							
Outsource process - Heat Treat	HEAT TREAT AS PER DWG, SEE NOTE #3								
	ISSUE P/O: 36164								

DQA: _____ Date: _____

WORK ORDER NON-CONFORMANCE / UPDATE

QA Closed: Date: Work Order update only ☐

Work Order: _____

Part No. _____

NCR No.

DISPOSITION

Rework	☐
Scrap	☐
Use-as-is	☐
Suspected Unapproved	☐

AGAINST DEPARTMENT/PROCESS

Skid-tube	☐	Cross tube	☐	Water Jet	☐	Engineering	☐
Machining	☐	Small Fab	☐	Prod. Eng. Coor.	☐	Quality	☐
Thermoforming	☐	Finishing	☐	Rec/Store/Packaging	☐	Other	☐
Large Fab	☐	Composite	☐	Supplier	☐		

Date :	Step #:	QTY Effective :	**MRB (QSI042) Approval**

Description Work Order Deviation	**Disposition**	**Completed By**
		Lead hand / Supervisor Approval Verification
		QC / QA Coordinator Approval

Root Cause

Environment	☐	☐	No Re-verfication
Design	☐	☐	Operator
Doc/Data	☐	☐	Offset/Setup
Equip/Tooling	☐	☐	Supplier
Handling/Pre	☐	☐	Training
Material	☐	☐	Use for Testing
Internal Transport	☐	☐	Poor Information
Tribal Knowledge	☐	☐	Rushing
LOA	☐	☐	Product Improvement
Substation	☐	☐	Process Improvement
Past Expiry Date	☐	☐	Manufacturing Process
Misidentified	☐	☐	Past Due

FAULT CATEGORY

☐	Pressure/Forced	☐	Temperature/Cure	☐	Power Loss/Surge	☐	Positioned Wrong
☐	Bending	☐	Set-up	☐	Folio/Program	☐	Outside Dimensions
☐	Centre Not Concentric	☐	BOM/Route	☐	Grain	☐	Over/Under tolerance
☐	Cracks	☐	Broken/Damage/Defect	☐	Weld	☐	Part Incorrect
☐	Crimp/Kink/Ripple/Wave	☐	Inspection Incomplete/Unqualified	☐	Wrong Stock Pulled	☐	Part Lost/Missing
☐	Cuffs	☐	Contamination	☐	Out of Sequence	☐	Part Moved
☐	Crushing	☐	Countersink	☐	Off-set	☐	Drawing
☐	Heat Treat	☐	Cut Too Short	☐	Mislabeled	☐	Finish
☐	Wave/Twist in Tube	☐	Instructions Incomplete/Unclear	☐	Fit/Function	☐	Misread
☐	Marks/Chatter	☐	Drill Holes	☐	Misaligned/off center	☐	Turning Sequence

☐ OTHER :

Work Order ID 160072 *160072*

Thursday, April 20, 2017 1:54:45 PM

Item ID: 646.3316 **Accept** *N900040100* **Setup Start** *NS1*

Revision ID:

Item Name: Blade **Stop** *NS2*

Start Date: 4/25/2017 **Start Qty:** 12.00 *12* **Cust Item ID:**

Required Date: 5/10/2017 **Req'd Qty:** 12.00 *12* **Customer:**

Reference: (P.A.)SCHEDULED/S

Run Start *NR1*

Approvals: **Process Plan:** _____ **Date:** _____ **Tooling:** _____ **Date:** _____

QC: _____ **Date:** _____ **SPC (Y/N):** _____ **Date:** _____ **Stop** *NR2*

Sequence ID/ Work Center ID	Operation Description	Set Up/ Run Hours	Tool ID	Tool #	Plan Code	Accept Qty	Reject Qty	Reject Number	Insp. Stamp
150 *150* Packaging Packaging	Receive & Inspect for Damage & Mat'l Certs	0.00				12	SP	17-5-23	
	Memo	0.24							
155 *155* QC Quality Control	QC5- Inspect part completeness to step on W/O	0.00				12			DAS 38 9-89 MAY 23 2017
	Memo	0.24							
160 *160* SprayPaint Spray Painting	Spray Painting per QSI005 4.2	0.00				12			DAS 41 9-89 MAY 31 2017
	Memo PRIME AS PER DWG, SEE NOTE #4 PRIMER BATCH: 137287	0.48							

DQA: _____ Date: _____

WORK ORDER NON-CONFORMANCE / UPDATE

DART AEROSPACE

QA Closed: Date: Work Order update only ☐

Work Order: _____

Part No. _____

NCR No.

DISPOSITION

Rework	☐
Scrap	☐
Use-as-is	☐
Suspected Unapproved	☐

AGAINST DEPARTMENT/PROCESS

Skid-tube	☐	Cross tube	☐	Water Jet	☐
Machining	☐	Small Fab	☐	Prod. Eng. Coor.	☐
Thermoforming	☐	Finishing	☐	Rec/Store/Packaging	☐
Large Fab	☐	Composite	☐	Supplier	☐

Engineering	☐		
Quality	☐		
Other	☐		
	☐		

Date :	Step #:	QTY Effective :	**MRB (QSI042) Approval**
Description Work Order Deviation		**Disposition**	
			Completed By
			Lead hand / Supervisor Approval Verification
			QC / QA Coordinator Approval

Root Cause

Environment	☐	☐	No Re-verfication
Design	☐	☐	Operator
Doc/Data	☐	☐	Offset/Setup
Equip/Tooling	☐	☐	Supplier
Handling/Pre	☐	☐	Training
Material	☐	☐	Use for Testing
Internal Transport	☐	☐	Poor Information
Tribal Knowledge	☐	☐	Rushing
LOA	☐	☐	Product Improvement
Substation	☐	☐	Process Improvement
Past Expiry Date	☐	☐	Manufacturing Process
Misidentified	☐	☐	Past Due

FAULT CATEGORY

☐ Pressure/Forced	☐ Temperature/Cure	☐ Power Loss/Surge	☐ Positioned Wrong
☐ Bending	☐ Set-up	☐ Folio/Program	☐ Outside Dimensions
☐ Centre Not Concentric	☐ BOM/Route	☐ Grain	☐ Over/Under tolerance
☐ Cracks	☐ Broken/Damage/Defect	☐ Weld	☐ Part Incorrect
☐ Crimp/Kink/Ripple/Wave	☐ Inspection Incomplete/Unqualified	☐ Wrong Stock Pulled	☐ Part Lost/Missing
☐ Cuffs	☐ Contamination	☐ Out of Sequence	☐ Part Moved
☐ Crushing	☐ Countersink	☐ Off-set	☐ Drawing
☐ Heat Treat	☐ Cut Too Short	☐ Mislabeled	☐ Finish
☐ Wave/Twist in Tube	☐ Instructions Incomplete/Unclear	☐ Fit/Function	☐ Misread
☐ Marks/Chatter	☐ Drill Holes	☐ Misaligned/off center	☐ Turning Sequence

☐ OTHER :

Item ID: 646.3316 **Accept** *N900040100* **Setup Start** *NS1*
Revision ID: **Stop** *NS2*
Item Name: Blade

Start Date: 4/25/2017 **Start Qty:** 12.00 *12*
Required Date: 5/10/2017 **Req'd Qty:** 12.00 *12*
Reference: (P.A.)SCHEDULED/S

Cust Item ID:
Customer:

Run Start *NR1*
Stop *NR2*

Approvals: **Process Plan:** _____ **Date:** _____ **Tooling:** _____ **Date:** _____
QC: _____ **Date:** _____ **SPC (Y/N):** _____ **Date:** _____

Sequence ID/ Work Center ID	Operation Description	Set Up/ Run Hours	Tool ID	Tool #	Plan Code	Accept Qty	Reject Qty	Reject Number	Insp. Stamp
170	QC14- Inspect Spray Paint	0.00							DAS 38 9-89
170						12			JUN 02 2017
QC	**Memo**	0.12							
Quality Control									
180	Identify as per dwg & Stock Location: CCR103	0.00							
180						12			DAS 6 9-89 JUN 02 2017
Packaging	**Memo**	0.12							
Packaging	***IDENTIFY AS PER APICAL MPP-120 BY STAMPING P# AND REV***								
190	QC21- Final Inspection - Work Order Release	0.00							
190							17/6/17		
QC	**Memo**	1.20							
Quality Control									

JUN 02 2017

DQA: _____ Date: _____

DART AEROSPACE

WORK ORDER NON-CONFORMANCE / UPDATE

QA Closed: Date: Work Order update only ☐

Work Order: _____

Part No. _____

NCR No.

DISPOSITION

Rework	☐
Scrap	☐
Use-as-is	☐
Suspected Unapproved	☐

AGAINST DEPARTMENT/PROCESS

Skid-tube	☐	Cross tube	☐	Water Jet	☐	Engineering	☐
Machining	☐	Small Fab	☐	Prod. Eng. Coor.	☐	Quality	☐
Thermoforming	☐	Finishing	☐	Rec/Store/Packaging	☐	Other	☐
Large Fab	☐	Composite	☐	Supplier	☐		

Date :	Step #:	QTY Effective :	MRB (QSI042) Approval

Description Work Order Deviation	Disposition	Completed By
		Lead hand / Supervisor Approval Verification
		QC / QA Coordinator Approval

Root Cause

Environment	☐	☐	No Re-verfication
Design	☐	☐	Operator
Doc/Data	☐	☐	Offset/Setup
Equip/Tooling	☐	☐	Supplier
Handling/Pre	☐	☐	Training
Material	☐	☐	Use for Testing
Internal Transport	☐	☐	Poor Information
Tribal Knowledge	☐	☐	Rushing
LOA	☐	☐	Product Improvement
Substation	☐	☐	Process Improvement
Past Expiry Date	☐	☐	Manufacturing Process
Misidentified	☐	☐	Past Due

FAULT CATEGORY

☐	Pressure/Forced	☐	Temperature/Cure	☐	Power Loss/Surge	☐	Positioned Wrong
☐	Bending	☐	Set-up	☐	Folio/Program	☐	Outside Dimensions
☐	Centre Not Concentric	☐	BOM/Route	☐	Grain	☐	Over/Under tolerance
☐	Cracks	☐	Broken/Damage/Defect	☐	Weld	☐	Part Incorrect
☐	Crimp/Kink/Ripple/Wave	☐	Inspection Incomplete/Unqualified	☐	Wrong Stock Pulled	☐	Part Lost/Missing
☐	Cuffs	☐	Contamination	☐	Out of Sequence	☐	Part Moved
☐	Crushing	☐	Countersink	☐	Off-set	☐	Drawing
☐	Heat Treat	☐	Cut Too Short	☐	Mislabeled	☐	Finish
☐	Wave/Twist in Tube	☐	Instructions Incomplete/Unclear	☐	Fit/Function	☐	Misread
☐	Marks/Chatter	☐	Drill Holes	☐	Misaligned/off center	☐	Turning Sequence

☐ OTHER :

Picklist Print

Thursday, April 20, 2017 1:54:45 PM

Work Order ID: 160072 *160072*

Parent Item: 646.3316 *646.3316*

Parent Item Name: Blade

Start Date: 4/25/2017 **Required Date:** 5/10/2017

Start Qty: 12.00 **Required Qty:** 12.00

Comments: IPP REV:A NEW ISSUE 12/11/07 JFS VERIFY BY: JLM

Component Item ID/ Item Name	Replacement Item ID	Mfg/ Purch	Bin Item	Primary Location	Last Location	Route Seq ID	Unit of Measure	Qty on Hand	Qty per Kit	Total Qty	Qty Issued	Date Issued	Status
MSTEEL-A2-B0.500X1.250		Purchased	No			100	f	41.7500	0.5	6.31579			
MSTEEL-A2-B0.500X1.250									**	6.083'		DAS 20 9-89	17-04-22

AISI A2 TOOL STEEL BAR, 0.500 X 1.250

Location	Loc Qty	Loc Code
MAT010	41.75	
M136847	17.75	
M137285	24	

6.083'

DQA: _____ Date: _____

WORK ORDER NON-CONFORMANCE / UPDATE

DART AEROSPACE

QA Closed: Date: Work Order update only ☐

Work Order: _____

Part No. _____

NCR No.

DISPOSITION

Rework	☐
Scrap	☐
Use-as-is	☐
Suspected Unapproved	☐

AGAINST DEPARTMENT/PROCESS

Skid-tube	☐	Cross tube	☐	Water Jet	☐
Machining	☐	Small Fab	☐	Prod. Eng. Coor.	☐
Thermoforming	☐	Finishing	☐	Rec/Store/Packaging	☐
Large Fab	☐	Composite	☐	Supplier	☐

Engineering	☐		
Quality	☐		
Other	☐		
	☐		

Date :

Step #:

QTY Effective :

MRB (QSI042) Approval

Description Work Order Deviation

Disposition

Completed By

Lead hand / Supervisor Approval Verification

QC / QA Coordinator Approval

Root Cause

Environment	☐	☐	No Re-verfication
Design	☐	☐	Operator
Doc/Data	☐	☐	Offset/Setup
Equip/Tooling	☐	☐	Supplier
Handling/Pre	☐	☐	Training
Material	☐	☐	Use for Testing
Internal Transport	☐	☐	Poor Information
Tribal Knowledge	☐	☐	Rushing
LOA	☐	☐	Product Improvement
Substation	☐	☐	Process Improvement
Past Expiry Date	☐	☐	Manufacturing Process
Misidentified	☐	☐	Past Due

FAULT CATEGORY

☐ Pressure/Forced	☐ Temperature/Cure	☐ Power Loss/Surge	☐ Positioned Wrong
☐ Bending	☐ Set-up	☐ Folio/Program	☐ Outside Dimensions
☐ Centre Not Concentric	☐ BOM/Route	☐ Grain	☐ Over/Under tolerance
☐ Cracks	☐ Broken/Damage/Defect	☐ Weld	☐ Part Incorrect
☐ Crimp/Kink/Ripple/Wave	☐ Inspection Incomplete/Unqualified	☐ Wrong Stock Pulled	☐ Part Lost/Missing
☐ Cuffs	☐ Contamination	☐ Out of Sequence	☐ Part Moved
☐ Crushing	☐ Countersink	☐ Off-set	☐ Drawing
☐ Heat Treat	☐ Cut Too Short	☐ Mislabeled	☐ Finish
☐ Wave/Twist in Tube	☐ Instructions Incomplete/Unclear	☐ Fit/Function	☐ Misread
☐ Marks/Chatter	☐ Drill Holes	☐ Misaligned/off center	☐ Turning Sequence

☐ OTHER :

DART AEROSPACE LTD	Work Order:	160072
Description: Blade	Part Number:	646.3316
Inspection Dwg: 646.3300 Rev: NC3		Page 1 of 1

INSPECTION SHEET

Drawing Dimension	Tolerance	Actual Dimension	Accept	Reject	Method of Inspection	Comments
5.87	+/-~~0.005~~ .010	5.860	✓		SL10	VerN
4.75	+/-~~0.005~~ .010	4.745	✓			
0.94	+/-~~0.005~~ .010	.937	✓			
0.524	+/-0.005	.524	✓			
0.240	+/-0.002	.239	✓			
0.694	+/-0.002	.693	✓			
1.250	+/-0.002	1.250	✓			
Ø0.177	+0.005/-0.001	.178	✓			
40°	+/-0.5°	40°	✓		Protractor	
0.375	+/-0.005	.374	✓		SL02	Mic
0.325 x 30°	+/-0.005 x +/-0.5°	.325	✓		SL10	VerN
	DAS 20 9-89			DAS 49 9-89		

Measured by:		Checked by:		QC Inspector:	
Date:	17-04-23	Date:	12/04/25	Date:	

Engineering Approval: (If necessary)		Date:	

Rev	Date	Change	Revised by	Approved
A	14.09.08	New Issue	KJ	
B	16.08.31	Dwg Rev updated	KJ	
C	16.11.02	Dimension corrected 0.694 was 0.094	KJ	

APICAL INDUSTRIES, INC.	ENGINEERING CHANGE NOTICE NO. 04765				SHEET 1 OF 1
	DWG NO. 646.3300	REV: NC	PREPARED BY J. SOTO	DATE: 12/08/2014	EFFECT ON DWG ☐ INC. ☒ UNINC.
	DWG TITLE: UPPER CUTTER ASSY				
	APPROVED BY: ENGR	MFG	QC		EFF. NEXT ORDER
TRANSACTION CODES (TC): A-ADD C-CREATE R-REVISE D-DELETE	REASON: ADDED HOLE DIMENSION TO 646.3313.				

SHEET 5 IS:

SHOP COPY
RETURN TO
ENGINEERING
UNCONTROLLED COPY
SUBJECT TO AMENDMENT
WITHOUT NOTICE
WORK ORDER
NO. 160072 MLS
1704-20

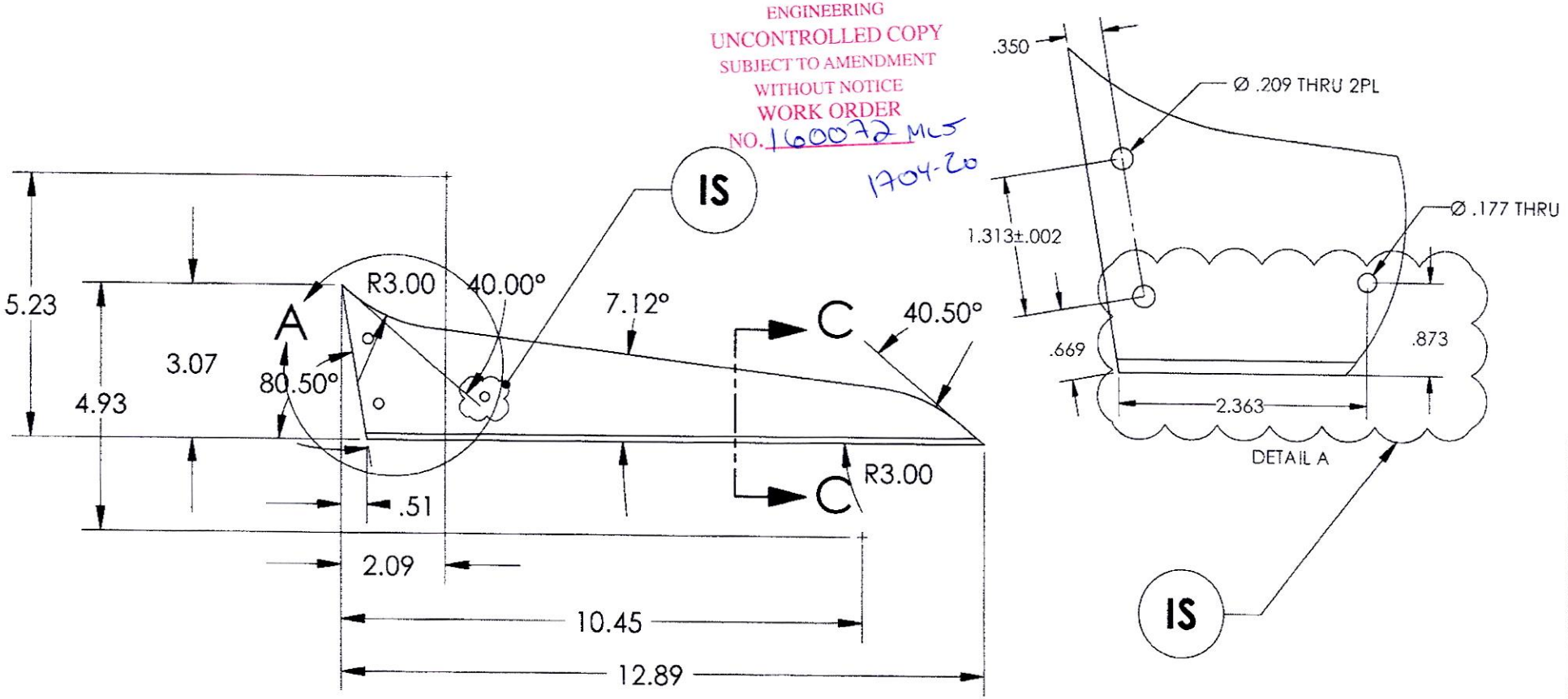

DOCUMENTS EFFECTED: ☐ MDL ☐ INSTALL INSTRUCTIONS ☐ ICA ☐ FMS ☐ BOM	CHANGE CATEGORY ☐ MAJOR ☒ MINOR	DER REVIEW REQUIRED ☐ YES ☒ NO

APICAL INDUSTRIES, INC.

ENGINEERING CHANGE NOTICE NO. 03724 | SHEET 1 OF 1

DWG NO. 646.3300 | REV: N/C | PREPARED BY B. PETERS | DATE: 12/05/12 | EFFECT ON DWG ☐ INC. ☒ UNINC.

DWG TITLE: UPPER CUTTER ASSY

APPROVED BY: ENGR [signature] | MFG David T. Baker | QC [signature] | EFF: NEXT ORDER

TRANSACTION CODES (TC): A-ADD C-CREATE R-REVISE D-DELETE

REASON: REVISED ORDINATE DIMENSION.

ECR: D-12-025

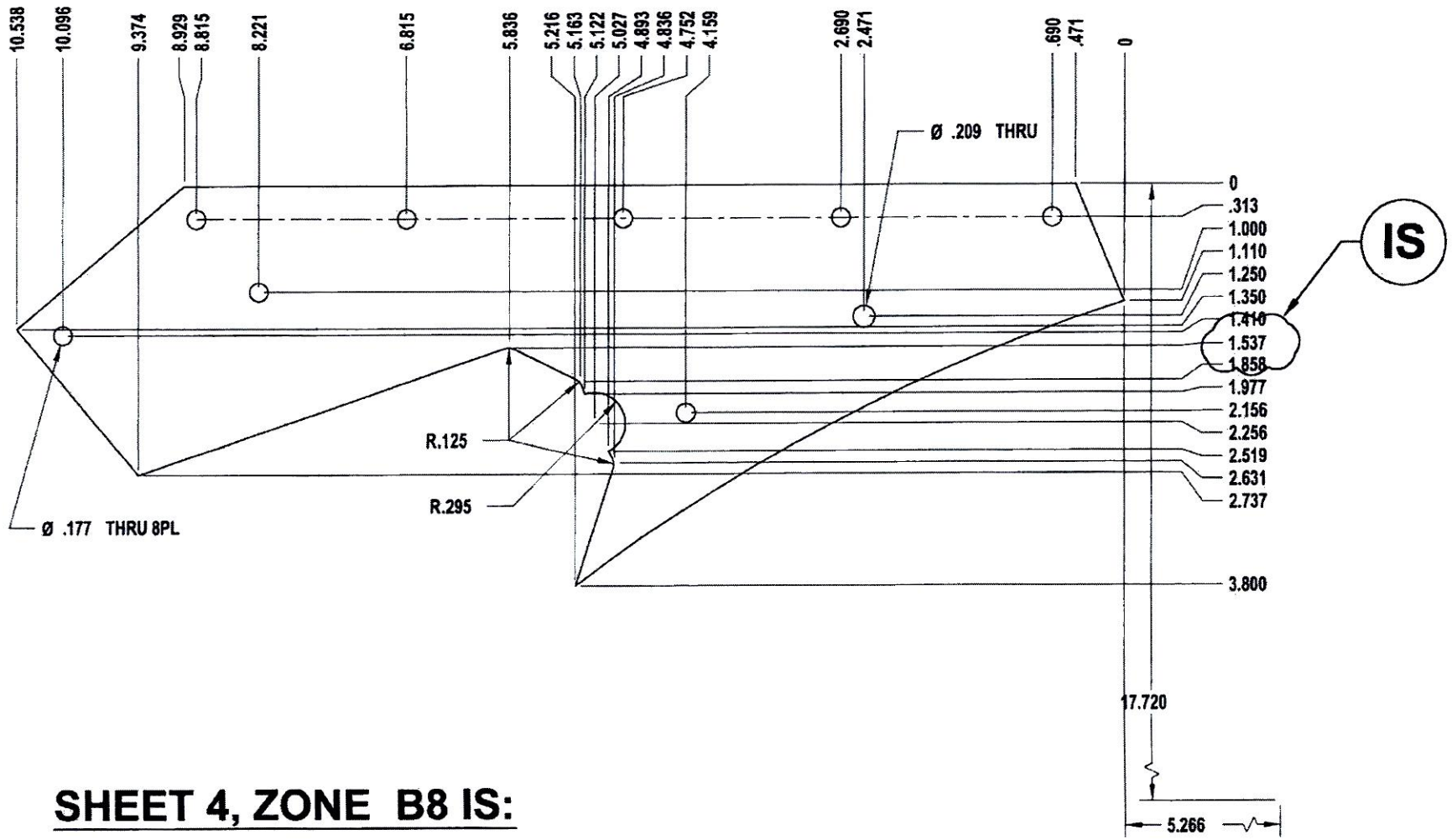

SHEET 4, ZONE B8 IS:

DOCUMENTS EFFECTED: ☐ RFMS ☐ MDL ☐ INSTALL INSTRUC ☐ ICA ☐ BOM

CHANGE CATEGORY ☐ MAJOR ☒ MINOR

DER REVIEW REQUIRED ☐ YES ☒ NO

APICAL INDUSTRIES, INC.

ENGINEERING CHANGE NOTICE NO. 02196 | SHEET 1 OF 2

DWG NO. 646.3300 | REV: N/C | PREPARED BY S. HUFF | DATE: 01/05/09 | EFFECT ON DWG ☐ INC. ☒ UNINC.

DWG TITLE: UPPER CUTTER ASSY

APPROVED BY: ENGR | MFG | QC | EFF: NEXT ORDER

TRANSACTION CODES (TC): A-ADD C-CREATE R-REVISE D-DELETE

REASON: REMOVED RIVETS IN FAVOR OF ADDITIONAL SCREWS

SHEET 1, VIEW 646.3301, IS:

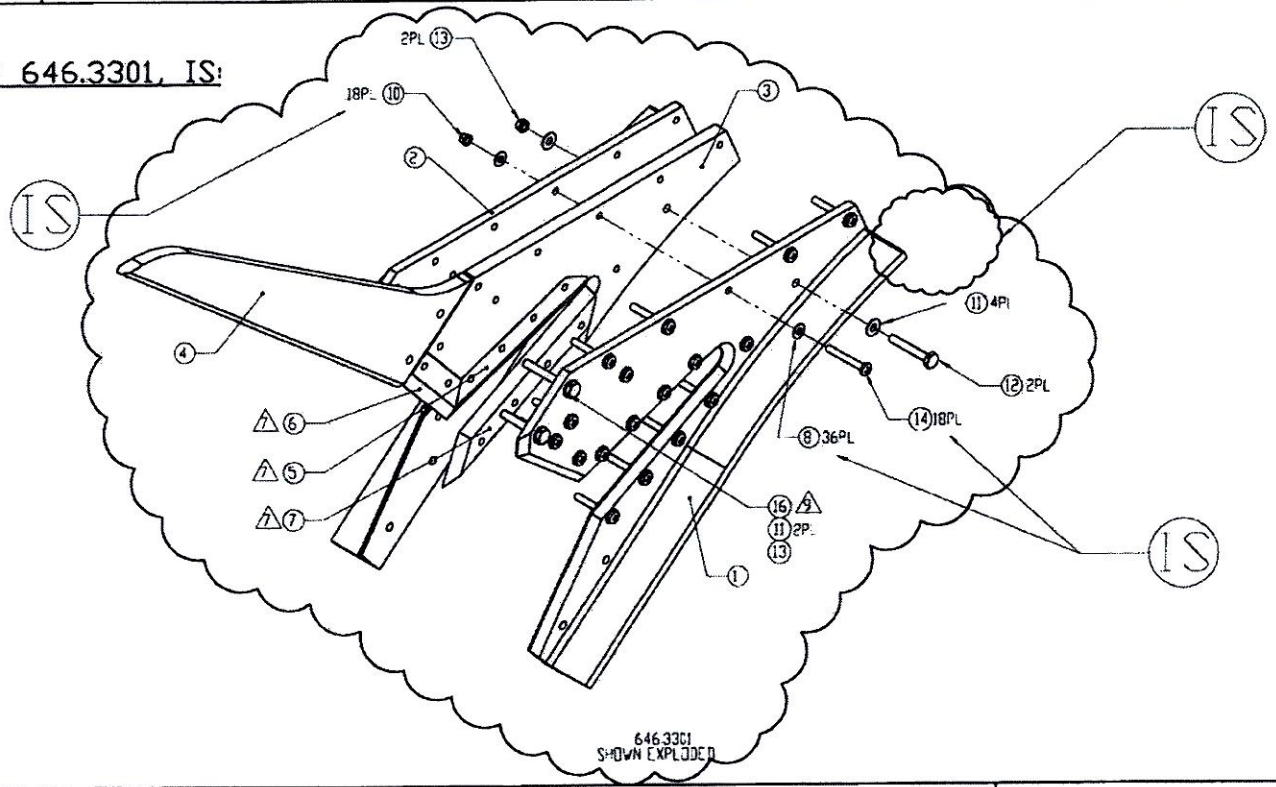

F/N	TC	PART NUMBER	QTY	DESCRIPTION	MATERIAL/SPECIFICATION
14	R	601.2765	18	SCREW	MS27039-0819
10	R	601.1541	18	LOCKNUT	MS21042L08
9	D	601.2766	3	RIVET	MS20470AD5-18
8	R	601.2764	36	WASHER	NAS1149FN832P
			.3301		

DOCUMENTS EFFECTED: ☐ MDL ☒ INSTALL INSTRUC ☒ ICA ☐ FMS ☒ BOM

CHANGE CATEGORY ☐ MAJOR ☒ MINOR

DER REVIEW REQUIRED ☐ YES ☒ NO

APICAL INDUSTRIES, INC.	ENGINEERING CHANGE ORDER NO. 02196	SHEET 2 OF 2

SHEET 3, SECTION VIEW A-A, IS:

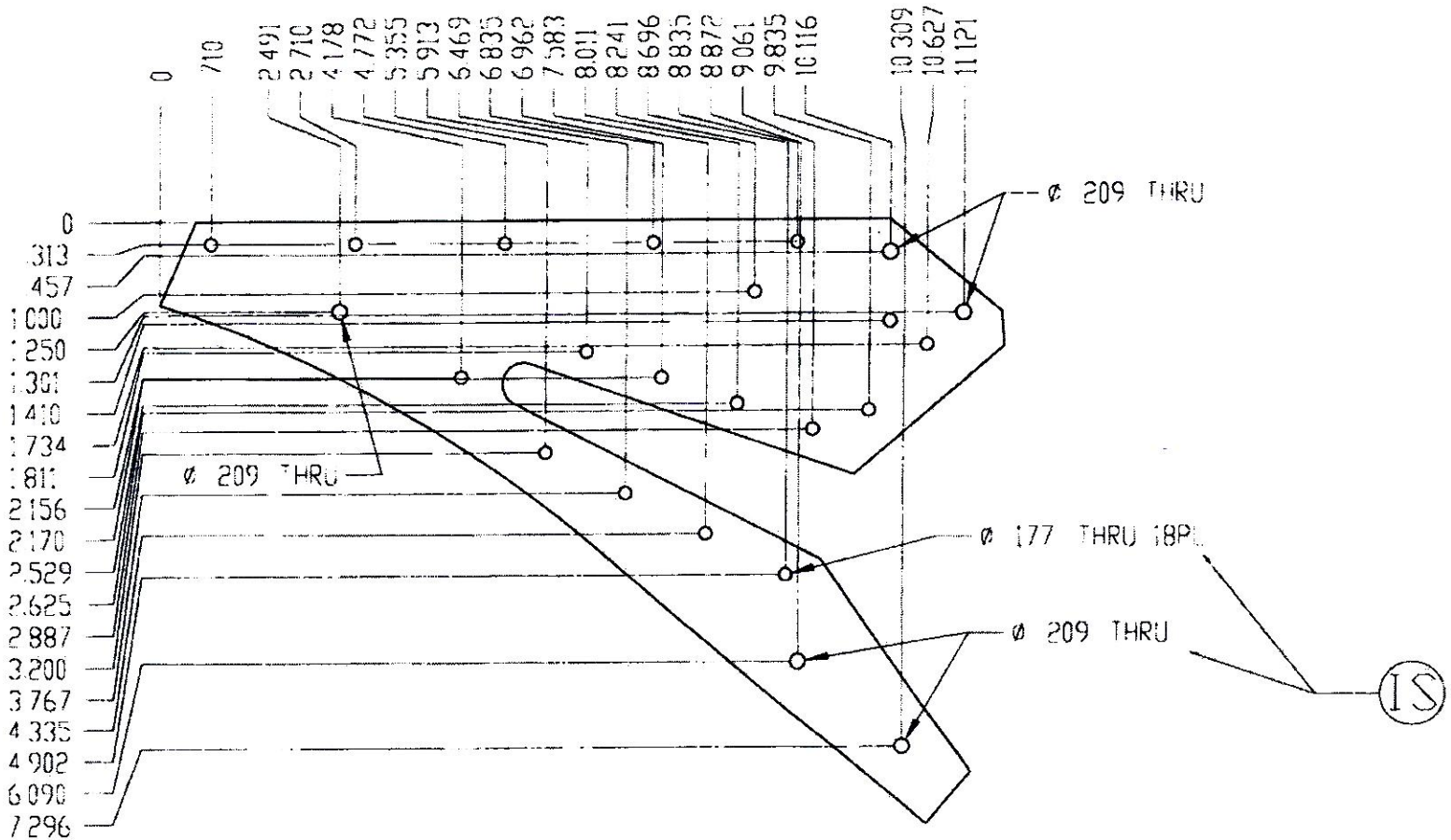

SECTION A-A (2/6)

F/N	TC	PART NUMBER	QTY	DESCRIPTION	MATERIAL/SPECIFICATION

THE INFORMATION CONTAINED IN THIS DRAWING IS THE SOLE PROPERTY OF APICAL INDUSTRIES. ANY REPRODUCTION IN PART OR WHOLE WITHOUT THE WRITTEN PERMISSION OF APICAL INDUSTRIES IS PROHIBITED.

REVISIONS			
REV	DESCRIPTION	DATE	APPROVED

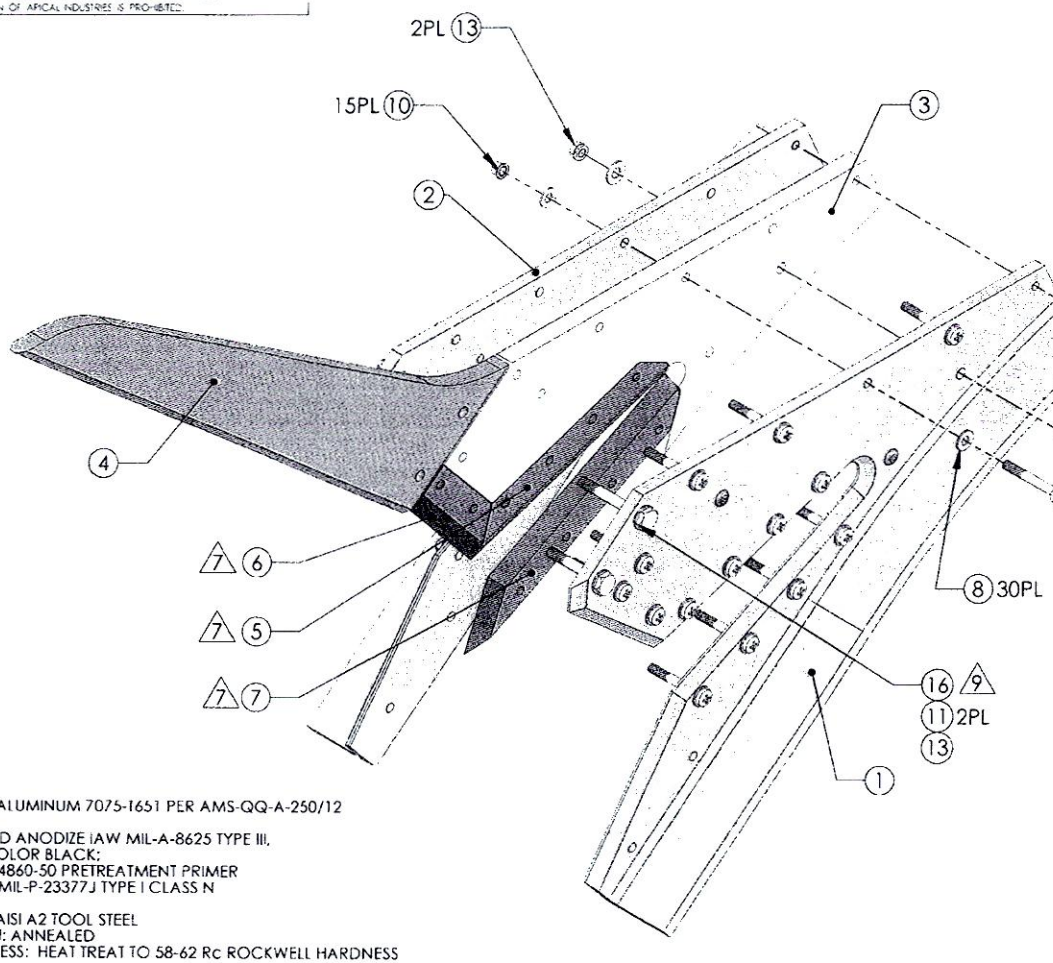

646.3301
SHOWN EXPLODED

UNINCORPORATED ECN(s)

D2196, 03724, 04765

ITEM	FIND #	PART #	DESCRIPTION	MAT'L	SPEC
1	16	601.2834	BOLT	AN3-14A	
A/R	15	601.2045	RTV, LOCTITE 598		
15	14	601.2765	SCREW	MS27039-0815	
3	13	601.1624	LOCKNUT	MS21045L3	
2	12	601.2763	BOLT	AN3-12A	
6	11	601.1607	WASHER	NAS1149F0332P	
15	10	601.1541	LOCKNUT	MS21042L08	
3	9	601.2766	RIVET	MS20470AD5-18	
30	8	601.2764	WASHER	NAS1149FN832P	
1	7	646.3316	BLADE	3	4
1	6	646.3315	BLADE	3	4
1	5	646.3314	BLADE	3	4
1	4	646.3313	UPPER GUIDE	1	2
1	3	646.3312	CENTER PLATE	1	2
1	2	646.3311	RH HALF	1	2
1	1	646.3310	LH HALF	1	2
X		646.3301	UPPER CUTTER ASSY		

QTY | PARTS LIST

NOTES:

1. MATERIAL: ALUMINUM 7075-T651 PER AMS-QQ-A-250/12
2. FINISH: HARD ANODIZE IAW MIL-A-8625 TYPE III, CLASS 2, COLOR BLACK; CARDINAL 4860-50 PRETREATMENT PRIMER PRIME IAW MIL-P-23377J TYPE I CLASS N
3. MATERIAL: AISI A2 TOOL STEEL CONDITION: ANNEALED POST PROCESS: HEAT TREAT TO 58-62 Rc ROCKWELL HARDNESS
4. FINISH: PRIME IAW MIL-P-23377J TYPE I CLASS N
5. DEBURR AND BREAK ALL SHARP EDGES EXCEPT WHERE OTHERWISE NOTED
6. IDENTIFY IAW MPP-120
7. APPLY F/N 15 AS REQUIRED TO ALL FAYING SURFACES OF F/N 5, 6 & 7 UPON ASSEMBLY
8. CUTTING EDGE INTENDED TO BE SHARP, DO NOT BREAK SHARP EDGE
9. INSTALL FASTENER FINGER-TIGHT

NEXT ASSY (S): 646.4000

ORIGINAL DATE (MO DA YR): 08-24-08
DRAWN BY: S. HUH
CHECKED: P. BRAVO
DRAWING APPROVAL: P. BRAVO 08.26.08
CONTRACT NO.

UNLESS OTHERWISE SPECIFIED DIMENSIONS ARE IN INCHES TOLERANCES ARE: 1 PLACE DECIMALS ±.01 2 PLACE DECIMALS ±.005 ANGLES ± 2°

APICAL INDUSTRIES
2608 TEMPLE HEIGHTS DR.
OCEANSIDE, CA. 92056-3512 (760)724-5300

UPPER CUTTER ASSY

SIZE	CAGE CODE	DWG NO	REV
B	07MZ6	646.3300	N/C

SCALE NONE | SHEET 1 OF 8

THE INFORMATION CONTAINED IN THIS DRAWING IS THE SOLE PROPERTY OF APICAL INDUSTRIES ANY REPRODUCTION IN PART OR WHOLE WITHOUT THE WRITTEN PERMISSION OF APICAL INDUSTRIES IS PROHIBITED.

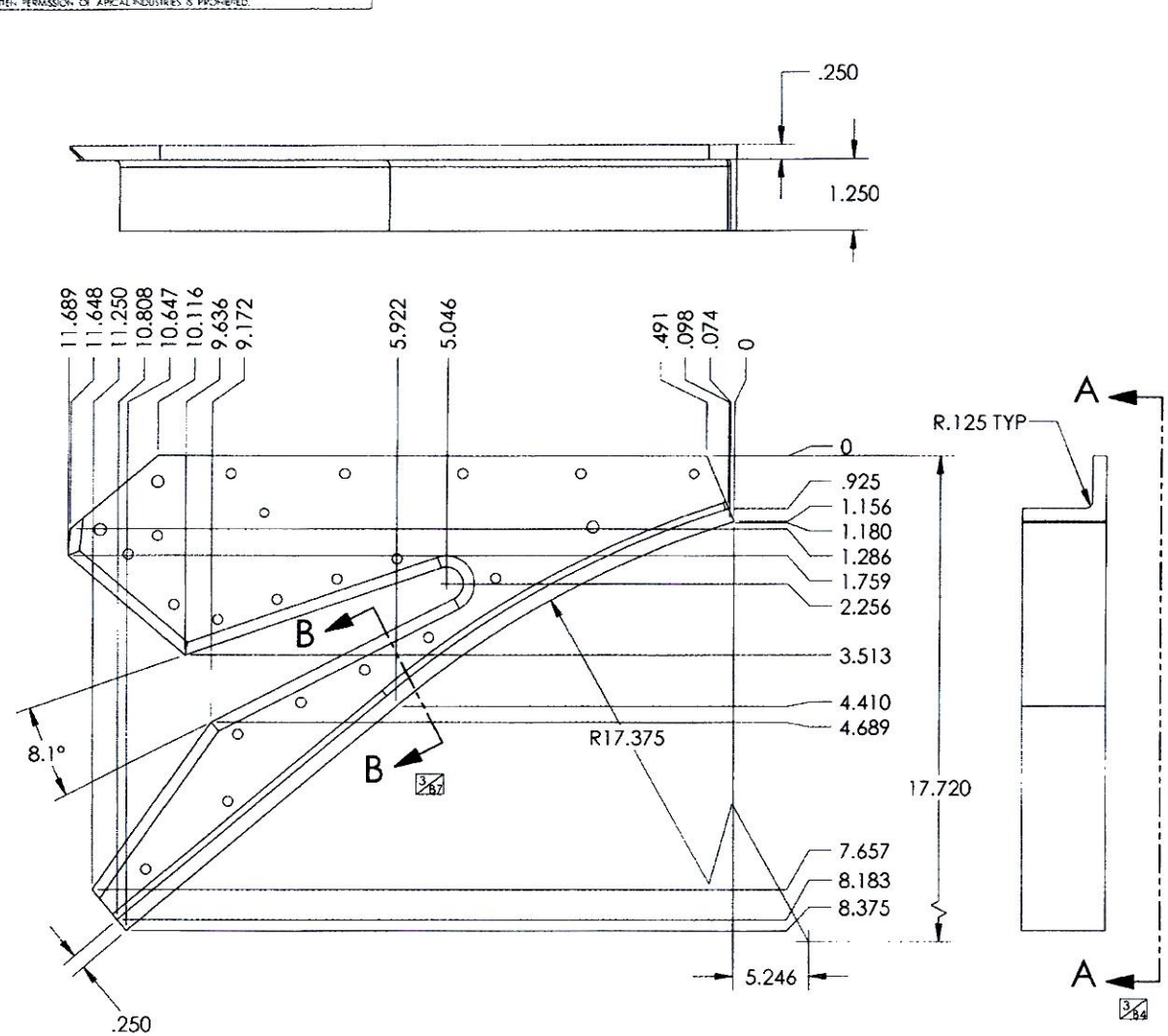

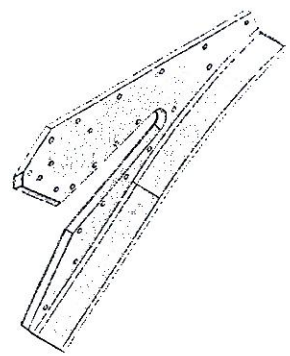

646.3310 SHOWN
646.3311 OPPOSITE

ORIGINAL DATE: TMO DA YRI 08 26 08	APICAL INDUSTRIES 2608 TEMPLE HEIGHTS DR. OCEANSIDE, CA. 92056-3512 (760)724-5300
DRAWN BY: S. HUFF / CHECKED: P. BRAVO	
DRAWING APPROVAL: P. BRAVO	UPPER CUTTER ASSY
CONTRACT 40	
UNLESS OTHERWISE SPECIFIED DIMENSIONS ARE IN INCHES TOLERANCES ARE: 2 PLACE DECIMALS ±.01 3 PLACE DECIMALS ±.005 ANGLES ± .5°	SIZE B / CAGE CODE 07M26 / DWG. NO. 646.3300 / REV. N/C
	SCALE: NONE / SHEET 2 OF 8

THE INFORMATION CONTAINED IN THIS DRAWING IS THE SOLE PROPERTY OF APICAL INDUSTRIES. ANY REPRODUCTION IN PART OR WHOLE WITHOUT THE WRITTEN PERMISSION OF APICAL INDUSTRIES IS PROHIBITED.

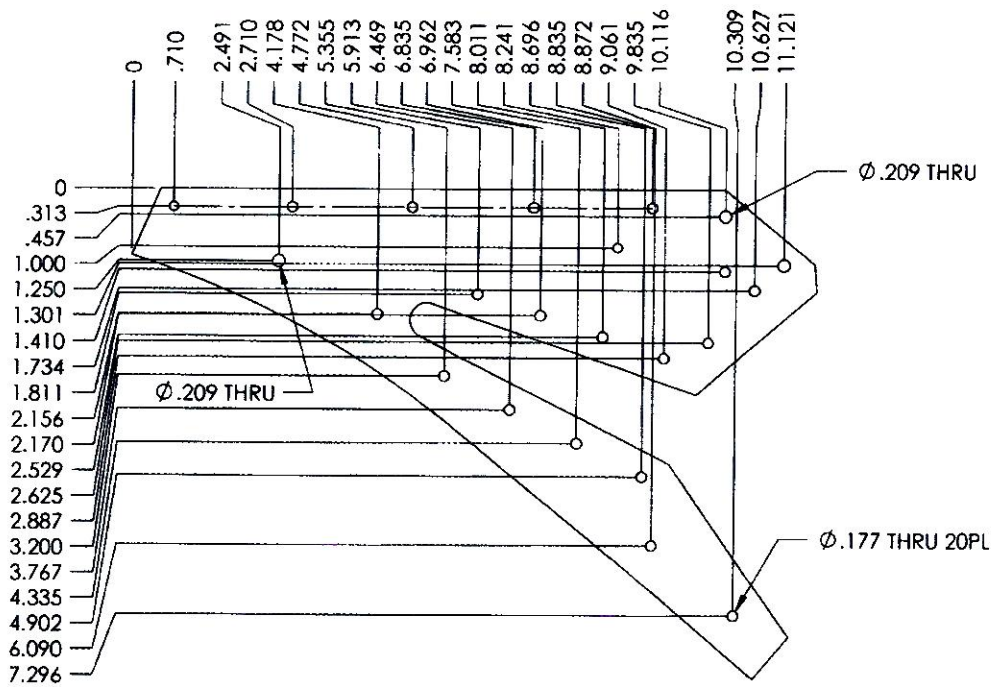

SECTION A-A

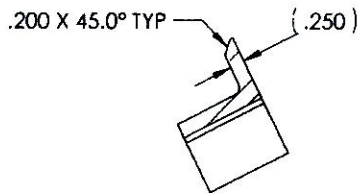

SECTION B-B

APICAL INDUSTRIES	2608 TEMPLE HEIGHTS DR. OCEANSIDE, CA. 92056 3512 (760)724 5300
UPPER CUTTER ASSY	
SIZE B	CAGE CODE 07MZ6
DWG NO 646.3300	REV N/C
SCALE NONE	SHEET 3 OF 8

THE INFORMATION CONTAINED IN THIS DRAWING IS THE SOLE PROPERTY OF APICAL INDUSTRIES ANY REPRODUCTION IN PART OR WHOLE WITHOUT THE WRITTEN PERMISSION OF APICAL INDUSTRIES IS PROHIBITED

REVISIONS			
REV	DESCRIPTION	DATE	APPROVED

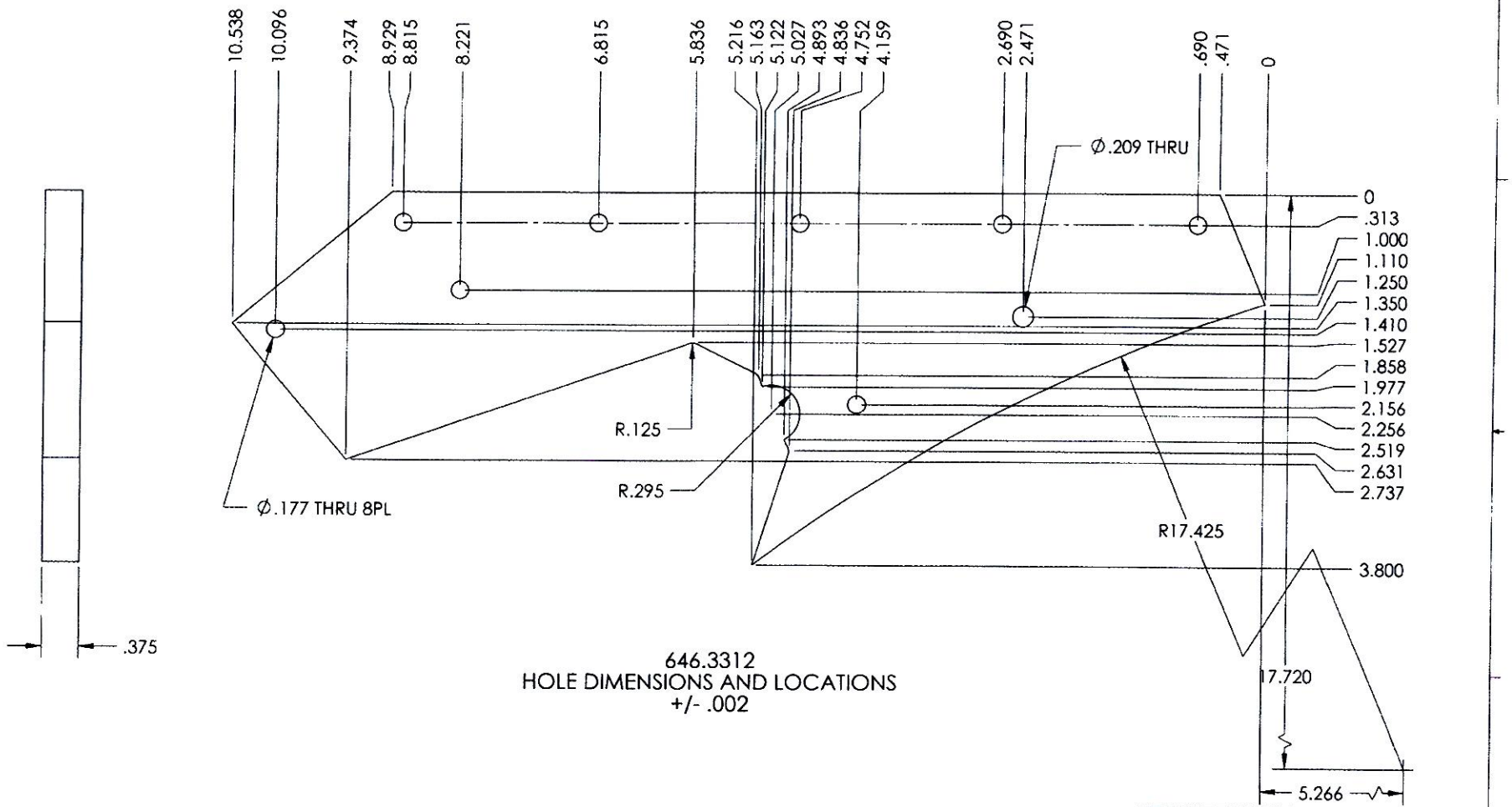

646.3312
HOLE DIMENSIONS AND LOCATIONS
+/- .002

ORIGINAL DATE (MO-DA-YR) 08-26-08	APICAL INDUSTRIES 2608 TEMPLE HEIGHTS DR. OCEANSIDE, CA. 92056-3512 (760)724-5300
DRAWN BY S. HUIN / CHECKER P. BRAVO	
DRAWING APPROVAL P. BRAVO 08-26-08	UPPER CUTTER ASSY
CONTRACT No.	
UNLESS OTHERWISE SPECIFIED DIMENSIONS ARE IN INCHES TOLERANCES ARE 1 PLACE DECIMALS ±.01 2 PLACE DECIMALS ±.005 ANGLES ± .5°	SIZE B / CAGE CODE 07MZ6 / DWG. NO. 646.3300 / REV N/C
	SCALE NONE / SHEET 4 OF 8

THE INFORMATION CONTAINED IN THIS DRAWING IS THE SOLE PROPERTY OF APICAL INDUSTRIES AND REPRODUCTION IN PART OR WHOLE WITHOUT THE WRITTEN PERMISSION OF APICAL INDUSTRIES IS PROHIBITED

REVISIONS			
REV	DESCRIPTION	DATE	APPROVED

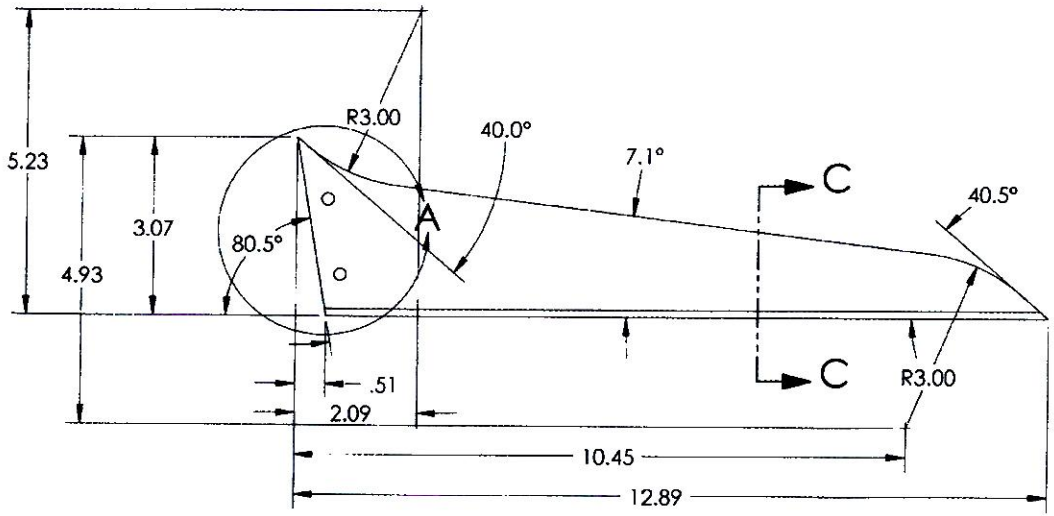

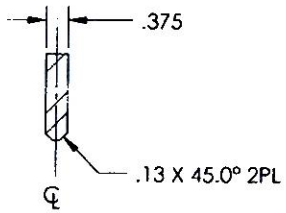

SECTION C-C

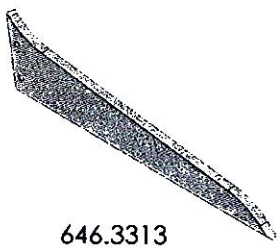

646.3313

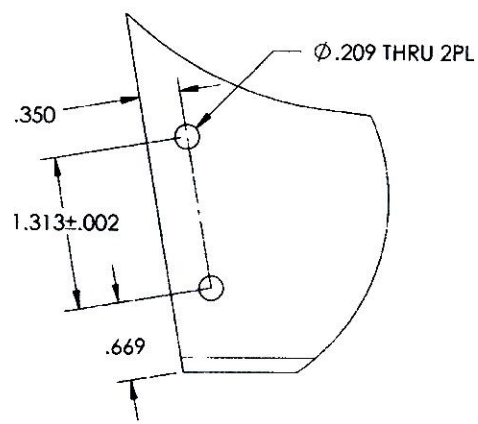

DETAIL A

ORIGINAL DATE (MO DA YR) 08-26-08	APICAL INDUSTRIES 2608 TEMPLE HEIGHTS DR. OCEANSIDE, CA. 92056-3512 (760)724-5300
DRAWN BY S. HUFF / CHECKER P. BRAVO	
DRAWING APPROVAL P. BRAVO 08-26-08	UPPER CUTTER ASSY
COMPACT No	
UNLESS OTHERWISE SPECIFIED DIMENSIONS ARE IN INCHES TOLERANCES ARE: 2 PLACE DECIMALS ±.01 3 PLACE DECIMALS ±.005 ANGLES ± .5°	SIZE B / CAGE CODE 07MZ6 / DWG NO 646.3300 / REV N/C SCALE NONE / SHEET 5 OF 8

THE INFORMATION CONTAINED IN THIS DRAWING IS THE SOLE PROPERTY OF APICAL INDUSTRIES A.I. REPRODUCTION IN PART OR WHOLE WITHOUT THE WRITTEN PERMISSION OF APICAL INDUSTRIES IS PROHIBITED

REVISIONS			
REV	DESCRIPTION	DATE	APPROVED

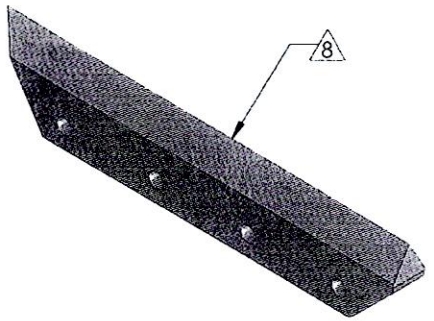

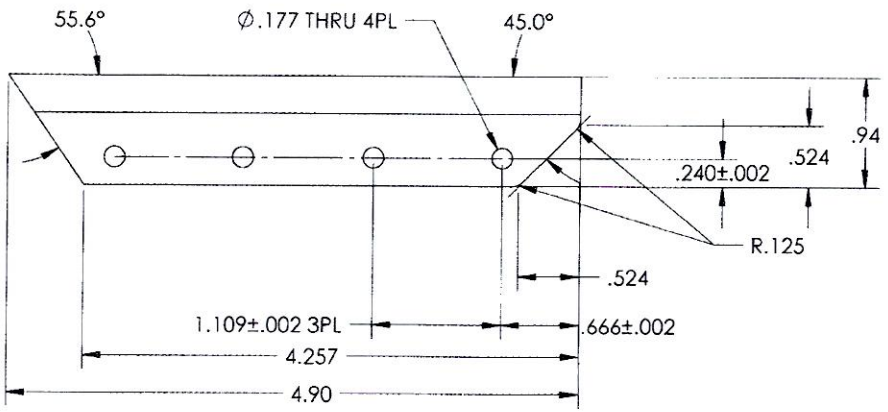

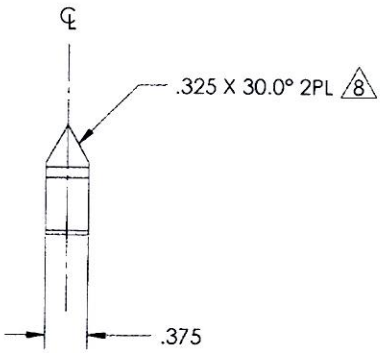

646.3314

ORIGINAL DATE	APICAL INDUSTRIES
DRAWN BY: S. HUFF	2608 TEMPLE HEIGHTS DR. OCEANSIDE, CA. 92056-3512 (760)724-5300
CHECKED: P. BRAVO	
DRAWING APPROVAL: P. BRAVO	UPPER CUTTER ASSY
CONTRACT NO.	SIZE: B; CAGE CODE: 07M26; DWG. NO: 646.3300; REV: N/C
UNLESS OTHERWISE SPECIFIED DIMENSIONS ARE IN INCHES TOLERANCES ARE 2 PLACE DECIMALS ± .01 3 PLACE DECIMALS ± .005 ANGLES ± 5°	SCALE: NONE; SHEET 6 OF 8

THE INFORMATION CONTAINED IN THIS DRAWING IS THE SOLE PROPERTY OF APICAL INDUSTRIES. ANY REPRODUCTION IN PART OR WHOLE WITHOUT THE WRITTEN PERMISSION OF APICAL INDUSTRIES IS PROHIBITED.

REVISIONS			
REV	DESCRIPTION	DATE	APPROVED

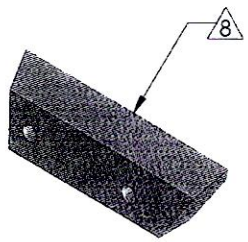

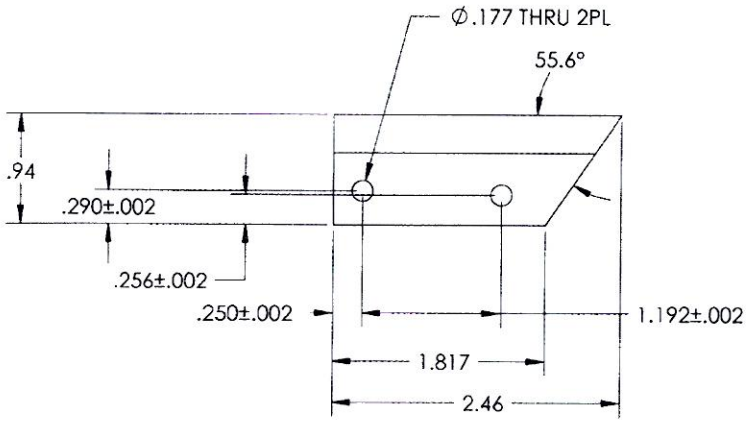

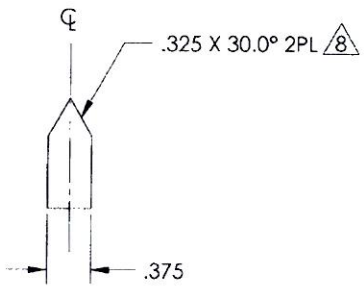

646.3315

ORIGINAL DATE	
MODIFIED	DR 26-04
DRAWN BY	CHECKER
S. HUFF	P. BRAVO
DRAWING APPROVAL	
P. BRAVO	
05-26-06	
CONTRACT No.	
UNLESS OTHERWISE SPECIFIED DIMENSIONS ARE IN INCHES TOLERANCES ARE: 2 PLACE DECIMALS ± 0.01 3 PLACE DECIMALS ± 0.005 ANGLES ± 5°	

APICAL INDUSTRIES
2608 TEMPLE HEIGHTS DR.
OCEANSIDE, CA. 92056-3512 (760)724-5300

UPPER CUTTER ASSY

SIZE	CAGE CODE	DWG. NO	REV
B	07MZ6	646.3300	N/C

SCALE NONE SHEET 7 OF 8

THE INFORMATION CONTAINED IN THIS DRAWING IS THE SOLE PROPERTY OF APICAL INDUSTRIES ANY REPRODUCTION IN PART OR WHOLE WITHOUT THE WRITTEN PERMISSION OF APICAL INDUSTRIES IS PROHIBITED.

REVISIONS

REV.	DESCRIPTION	DATE	APPROVED

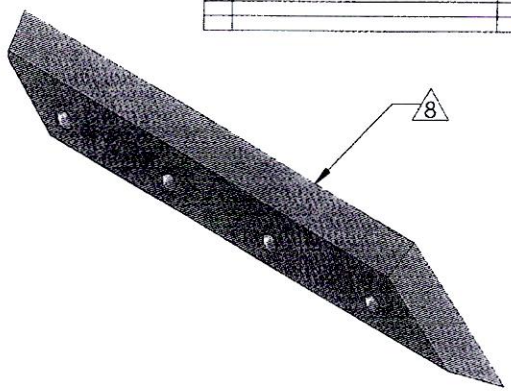

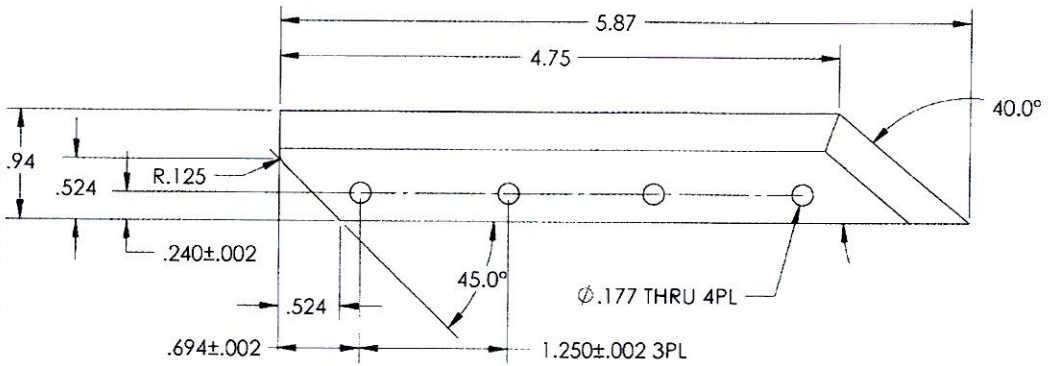

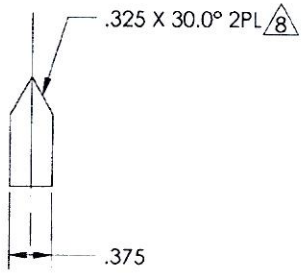

646.3316

ORIGINAL DATE (MO-DA-YR) 08-26-08	APICAL INDUSTRIES 2608 TEMPLE HEIGHTS DR. OCEANSIDE, CA. 92056-3512 (760)724-5300
DRAWN BY S. HUFF / CHECKER P. BRAVO	
DRAWING APPROVAL P. BRAVO 08-26-08	UPPER CUTTER ASSY
CONTRACT No	
UNLESS OTHERWISE SPECIFIED DIMENSIONS ARE IN INCHES TOLERANCES ARE: 2 PLACE DECIMALS ±.0 3 PLACE DECIMALS ±.005 ANGLES ± .5°	SIZE B / CAGE CODE 07MZ6 / DWG NO 646.3300 / REV N/C
	SCALE NONE / SHEET 8 OF 8

Dart Aerospace Ltd.
1270 Aberdeen Street
Hawkesbury, ON K6A 1K7
Tel: 613 632 9577
Fax: 613 632 1053

PURCHASE ORDER

Purchase Order ID PO36164

Purchase Order Date 5/2/2017
PO Print Date 5/17/2017

Order From : VC-MET004

METCOR INC.
560 BOUL. ARTHUR SAUVE
SAINT-EUSTACHE, QC J7R 5A8
CA

Ship To : DART AEROSPACE LTD

1270 ABERDEEN
HAWKESBURY, ON K6A 1K7
CANADA

Contact Name
Vendor Phone 450 473 1884

Ship To Contact
Ship To Phone
Ship Via: FedEx Economy collect
Ship Acct:

Buyer Chantal Lavoie
Customer POID
Customer Tax # 10127-2607
Terms Net 30
Currency CAD
FOB FCA – (Free Carrier)

5	160072	646.3316 BLADE	5/18/2017 Yes 5/18/2017	12.00		$4.81	$57.69

DAS
38
9-89

FINISH: HEAT TREAT TO 58-62 RC
ROCKWELL HARDNESS

PART ARE MADE FROM AISI A2 TOOL STEEL

PLEASE NOTE: DETAIL C OF C REQUIRED

Sept 5-23

Line Total: **$57.69**

6	71401-45	PROCUREMENT QUALITY CLAUSES	5/18/2017 No 5/18/2017	1.00		$0.00	$0.00

Procurement Quality Clauses
A005 right of entry
A012 chemical and physical test report
A020 non-destructive test/inspection identification
A021 dart aerospace processing
A024 process certifications
A026 certification of material conformance
A042 Dart notification by supplier
A043 retention of quality document

Line Total: **$0.00**

PO Total: **$250.00**

Note: Terms & Condition of Purchasing(Suppliers) and Procurement Quality Clauses are an integral part of our AS9100 requirements. To learn in detail, please visit www.dartaerospace.com for further explanation.

Change Nbr: 2 **Change Date:** 5/17/2017

METCOR INC.

560 BOUL. ARTHUR-SAUVÉ
ST-EUSTACHE, QC J7R 5A8
Tel: 450-473-1884 / Fax: 450-491-5498

Reçu de livraison

Delivery Receipt

BON DE TRAVAIL Order	EXPÉDITEUR Shipper ID	BON D'EXPÉDITION Shipper
318924	1	119512

EXPÉDITION COMPLÈTE / Shipped Complete

CLIENT /Customer 215

DART AEROSPACE
1270 ABERDEEN
HAWKESBURY, ON K6A 1K7
Ph: 613-632-5200
Fax: 613-632-1053

LIVRÉ À /Shipped To

DART AEROSPACE
1270 ABERDEEN
HAWKESBURY, ON K6A 1K7
Ph: 613-632-5200
Fax: 613-632-1053

COMMANDE DU CLIENT Customer PO	BON DE LIVRAISON DU CLIENT Customer Shipper No.	TYPE DE MATÉRIEL Material Type	DATE DE LA COMMANDE Order Date	TRANSPORTEUR Carrier
36164		A2	2017/5/3	MINIMAX 1/2

QUANTITÉ Quantity	No. PIÈCE / NOM DE LA PIÈCE / DESCRIPTION DE LA PIÈCE Part No. / Part Name / Part Description	POIDS Weight
52	646.3015 (10) 646.3015 160180 (10) 646.3015 158880 (8) 646.3314 160187 (12) 646.3315 160073 (12) 646.3316 160072	17,

SO17-5-23

1 VALISE

TYPE DE CONTENEUR Container Type	# DE CONTENEURS # Of Containers	COMMENTAIRES CONTENEUR Container Comments
VALISE	1	

CERTIFICAT

EMPAQUETAGE Packing	

QUANTITÉ EXPÉDIÉE / Quantity Shipped :	52
POIDS EXPÉDIÉ / Weight Shipped :	17,00
QUANTITÉ RESTANTE / Quantity Remaining :	0
POIDS RESTANT / Weight Remaining :	0,00

CERTIFICAT

QUANTITÉ EXPÉDIÉE Quantity Shipped:	52
POIDS EXPÉDIÉ / Weight Shipped :	17,00

Signature: **Date:**

EXPÉDIÉ LE / Shipped On : **2017/05/16**

DAS 38 9-89

F-050-06 Rev. B

METCOR INC.

560 BOUL. ARTHUR-SAUVÉ, ST-EUSTACHE, QC, J7R 5A8
Tél.: 450-473-1884
Télécopieur / Fax administration: 450-491-5498
Télécopieur / Fax production: 450 491-6454

Certificat de Conformit
Certificate of Compliance

BON DE TRAVAIL order	CHARGEMEI load
318924	1

CLIENT / customer 215
DART AEROSPACE
1270 ABERDEEN
HAWKESBURY ON K6A 1K7

LIVRÉ À / shipped to: 1
DART AEROSPACE
1270 ABERDEEN
HAWKESBURY ON K6A 1K7

COMMANDE DU CLIENT customer po	CLASSIFICATION PIECE part classification	MATÉRIEL material	MAÎTRE D'OEUVRE prime contractor	PROGRAM
36164	N/A	A2		

SPÉCIFICATIONS DU PROCÉDÉ
processing specifications

VAC HARDEN

HARDEN AND TEMPER

EXIGENCE / requirement	SPÉCIFICATIONS / specified	TESTS EXÉCUTÉS / performed	RÉSULTATS DE TESTS / results
HARDNESS	58 - 62 HRC	5	60 - 62 HRC

QUANTITÉ quantity	POIDS weight	DESCRIPTION DES PIÈCES parts description
52	17	646.3015 (10) 646.3015 160180 (10) 646.3015 158880 (8) 646.3314 160187 (12) 646.3315 160073 (12) 646.3316 160072 1 VALISE

2017-5-23
16 pcs

COMMENTAIRES / comments

APPROUVÉ par / Approved by: METCOR 7 **DATE: 2017-05-16**

METCOR INC.

560 BOUL. ARTHUR-SAUVÉ, ST-EUSTACHE, QC, J7R 5A8
Tél.: 450-473-1884
Télécopieur / Fax administration: 450-491-5498
Télécopieur / Fax production: 450 491-6454

Certificat de Conformité Détaill
Detailed Certificate of Compliand

BON DE TRAVAIL order	CHARGEMEN load
318924	1

CLIENT / customer 215
DART AEROSPACE
1270 ABERDEEN
HAWKESBURY ON K6A 1K7

LIVRÉ À / shipped to: 1
DART AEROSPACE
1270 ABERDEEN
HAWKESBURY ON K6A 1K7

COMMANDE DU CLIENT customer po	CLASSIFICATION PIECE part classification	MATÉRIEL material	MAÎTRE D'OEUVRE prime contractor	PROGRAM
36164	N/A	A2		

SPÉCIFICATIONS DU PROCÉDÉ
processing specifications

VAC HARDEN

HARDEN AND TEMPER

EXIGENCE / requirement	SPÉCIFICATIONS / specified	TESTS EXÉCUTÉS / performed	RÉSULTATS DE TESTS / results
HARDNESS	58 - 62 HRC	5	60 - 62 HRC

QUANTITÉ quantity	POIDS weight	DESCRIPTION DES PIÈCES parts description
52	17	646.3015 (10) 646.3015 160180 (10) 646.3015 158880 (8) 646.3314 160187 (12) 646.3315 160073 (12) 646.3316 160072 1 VALISE

COMMENTAIRES / comments

VAC HARDEN 1800F, 1:30 HR
TEMPER 400F, 2 HRS

Heat treatment (HT) was performed with equipment that meets the requirements of AMS2759 & AMS2750.
All HT operations were in compliance with AMS2759 and all verifications have been performed and documented. No unauthorized changes were performed in regards to the HT. We certify that the material was manufactured, sampled, tested and inspected in accordance with AMS2759 and the purchase order and was found to meet the requirements.
This document and any attached documents may contain confidential or proprietary information and may be subject to export control laws and regulations. If you are not the intended recipient, you are notified that any dissemination, copying of this e-mail and any attachments thereto or use of their contents by any means whatsoever is strictly prohibited. Unauthorized export or re-export is prohibited.
Le traitement thermique (TT) a été fait en utilisant des équipements en conformité avec AMS2759 et AMS 2750.
Le TT a été fait tel que requis par AMS2759 et toutes les vérifications et les tests demandés ont été faites et documentés. Aucun changement n'a été faite par rapport au TT. On certifie que le matériel a été fabriqué, échantillonné, testé et inspecté en accord avec AMS2759 et le bon de commande et le matériel rencontre les exigences spécifiées.
Ce document et les documents qui lui sont joints peuvent contenir des informations confidentielles, être soumis aux règlementations relatives au contrôle des exportations ou ayant un caractère privé. S'ils ne vous sont pas destinés, nous vous signalons qu'il est strictement interdit de les divulguer, de les reproduire ou d'en utiliser de quelque manière que ce soit le contenu. Toute exportation ou réexportation non autorisée est interdite.

APPROUVÉ par / Approved by: Isabel Otero QA Technician METCOR 12 DATE: 2017-05-17